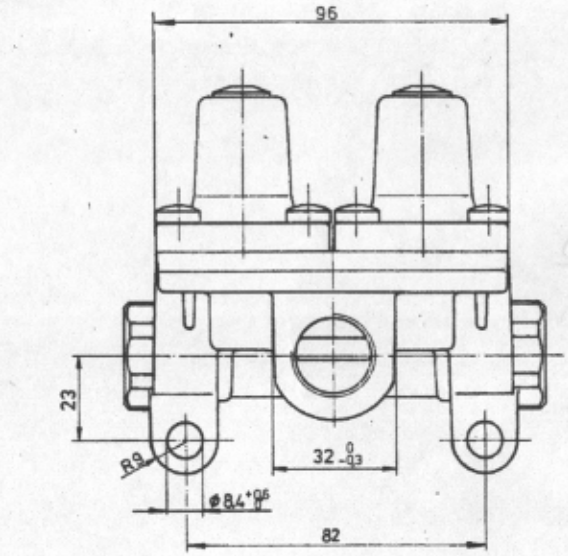

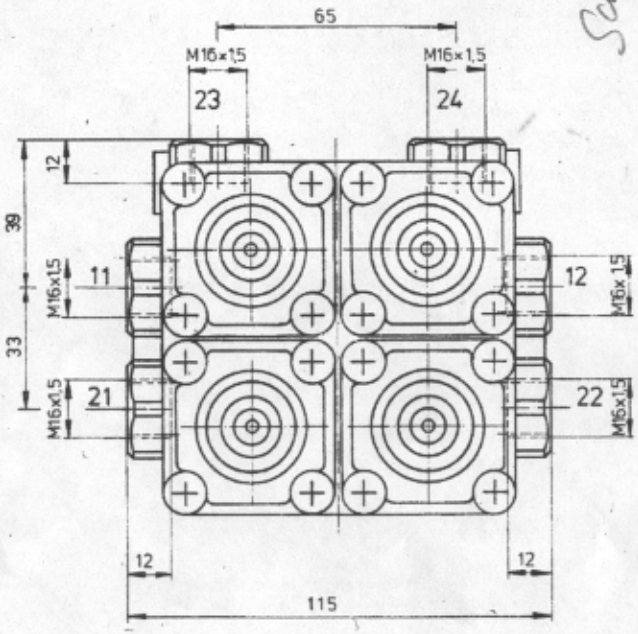

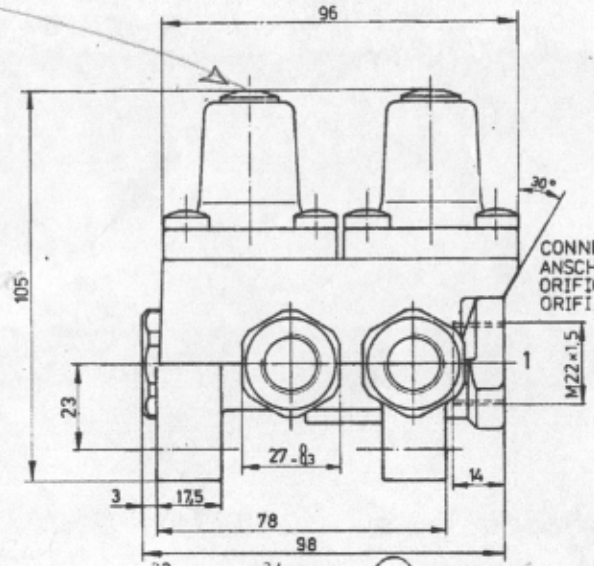

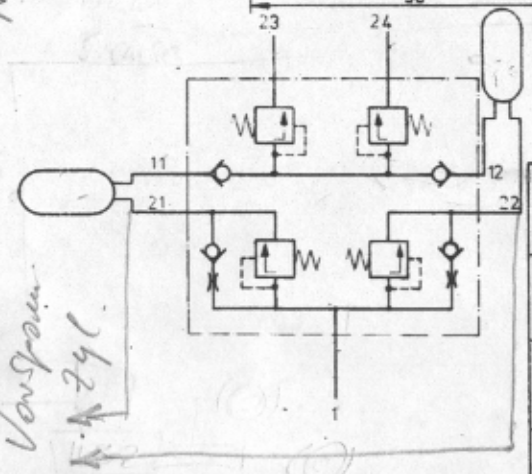

Schutzkappe VABCO
NR 897753 3614

Vorspann
Zyl

SERVICE PRESSURE :
BETRIEBSDRUCK : MA
PRESSION DE SERVICE :
PRESSIONE D'ESERCIZIO:

MEDIUM : A
MEDIUM : L
MILIEU : Al
FLUIDO : Al

CONNECTIONS:
ANSCHLUESSE:
ORIFICES:
ORIFIZI:

1, 11, 12 = SUPPLY
= LUFTEINTRITT
= ALIMENTATION
= ALIMENTAZIONE

21 = CIRCUIT 1
= KREIS 1
= CIRCUIT 1
= CIRCUITO 1

22 = CIRCUIT 2
= KREIS 2
= CIRCUIT 2
= CIRCUITO 2

23 = CIRCUIT 3
= KREIS 3
= CIRCUIT 3
= CIRCUITO 3

24 = CIRCUIT 4
= KREIS 4
= CIRCUIT 4
= CIRCUITO 4

CIRCUIT KREIS CIRCUIT CIRCUITO	21	22	
OPENING PRESSURE [bar] * OEFFNUNGSDRUCK [bar] PRESSION D'OUVERTURE [bar] PRESSIONE DI APERTURA [bar]	7-0,3		
CLOSING PRESSURE DYNAMIC [bar] SCHLIESSDRUCK DYNAMISCH [bar] PRESSION DE FERMETURE DYNAM. [bar] PRESSIONE DI CHIUSURA DINAM. [bar]	≧5		
CLOSING PRESSURE STATIC [bar] AT FAILURE OF CIRCUIT	0	≧4,5	
SCHLIESSDRUCK STATISCH [bar] BEI AUSFALL VON KREIS	≧4,5	0	
PRESSION DE FERMETURE STAT. [bar] EN CAS DE DEFAILLANCE DU CIRCUIT	4,5+0,7 Ⓐ		
PRESSIONE DI CHIUSURA STATICO [bar] IN CASO DI DIFETTO DEL CIRCUITO	4,5+0,7 Ⓐ		4

*) OPENING PRESSURE = MAINTAINED PRESSURE
OEFFNUNGSDRUCK = GESICHERTER DRUCK
PRESSION D'OUVERTURE = PRESSION MAINTENUE
PRESSIONE DI APERTURA = PRESSIONE MAINTENUTA

ADMISSIBE TEMPERATURES
THERMISCHER ANWENDUNGSBEREICH - 40°...+90°
TEMPERATURE DE SERVICE
TEMPERATURA D'ESERCIZIO

77-08-16	Warendorf	WABCO WESTING
77-08-16	[illegible]	PROTECTION VALVE (FOR 4 VALVE DE PROTECTION (A VALVOLA DI PROTEZIONE SCHUTZVENTIL (FUER 4
77-08-17	[illegible]	
33232 4 A 85.10.24	1,2	1:1	934 702 220 0

WABCO